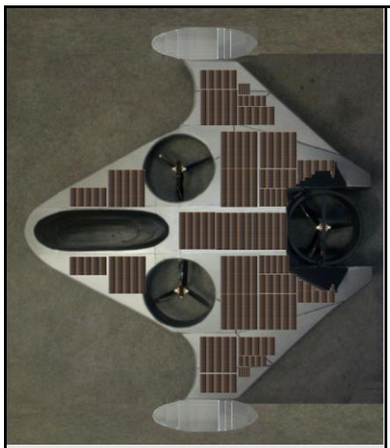

Strategic Technology Leader

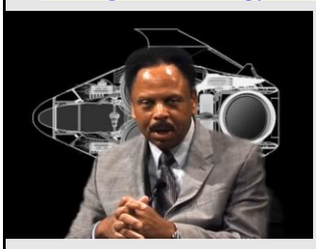

Ben Berry,
Founder and CEO, MBA, BS Life Science, Aerospace Manufacturer
AirShip Technologies Group

Unified Carbon Fiber Airframe

AirShip UAV Long Flight Endurance: "Solar Turbine"

Ducted Fan Aerial Electric Re-Generation

Dear Dean Mitzi M. Montoya:
As a member of the OSU Business Information Systems (BIS) Advisory Board, I was very excited to learn about the proposed new Master of Science (MS) degree in Business with concentrations in Financial Planning and Supply Chain Analytics at our October 2017 board meeting. As an Advisory Board member, I have a deep commitment to and support of the University's undergraduate Business Information Systems degree program and urge the College of Business to continue to grow the supply of BIS graduates to meet the growing demand from industry for BIS skill sets and knowledge.

As the BIS Advisory Board is made up of both business operations management and information systems executives, we recognize how MS in Business (MSB) graduates are uniquely qualified to lead organizations in meeting the twenty-first century challenge of attaining and sustaining global excellence. The industry at large is undergoing staff retirements and we expect MSB graduates would satisfy a staffing need distinctly different from the BIS undergraduates.

Recruitment has been a windfall for our BIS undergraduate program. In recent years, most of our BIS graduates received job offers and accepted positions within days or weeks of graduation. Most received offers prior to graduation and many received multiple offers. This track record is exceptional, especially during the economic times in which we live with the current Oregon unemployment rate of 4.3% and a national rate of 4.1%. Moreover, it is my strong belief that this placement success will extend to MSB graduates.

The overall value of a Master of Science (MS) degree in Business degree serves well the business and technology clusters across the State of Oregon. Overall, many highly skilled graduates are needed to supply the growing needs of our Silicon Forest here in the Pacific Northwest. We need a skilled work force that is sufficient to satisfy growth needs in product and service production.

Only ten years since program inception, BIS majors in the undergraduate class of 2017 represent a good portion of all OSU College of Business students. This impressive growth directly reflects an industry marketplace eager to utilize the specialized project management, supply chain management, decision analysis, optimization, and enterprise system competencies developed in the program.

The undergraduate program's success clearly demonstrates that the University has established a strong niche with its current BIS program. I believe a similar success is possible with the proposed MSB program. A number of universities have created specialized Master of Science programs in supply chain management or information systems. However, to the best of my knowledge, none of these offers the integrated Financial Planning and Supply Chain Analytics focus that has made our BIS program so successful. Moreover, the MSB program would be unique in the Northwest and we have already proven ourselves against other narrower programs such as those offered by other State universities.

The State's Oregon Labor Market Information System estimates that there are

AirScape Cloud Services

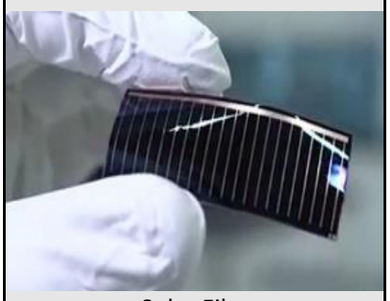

Solar Film

Carbon Fiber 3D Printed Digital Additive Manufacturing

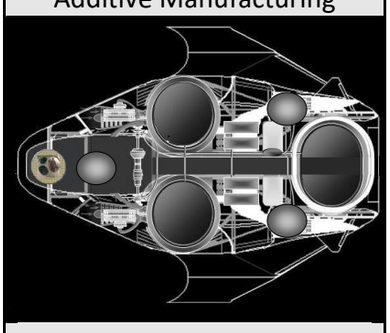

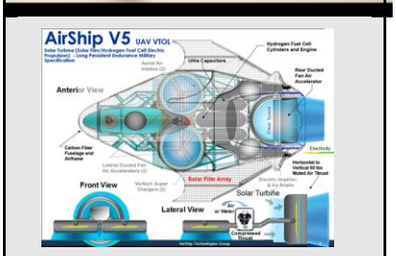

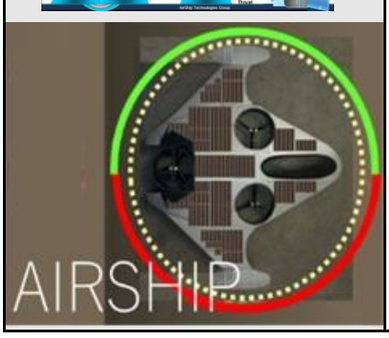

approximately 212,460 Financial and Computing jobs in Oregon. Roughly 70 – 90 percent of these jobs are found outside the high tech industry in hospitals, banks, distribution centers, agricultural processing companies, manufacturing and others. Investing in the MSB program affords OSU the opportunity to strengthen our ability to keep up with industry needs and expectations.

In closing, I highly support the proposed MSB degree program and I understand the importance of recruiting a strong initial student cohort for this program. Therefore, in addition to the BIS Advisory Board's usual advising role in curriculum formation, student mentoring, and placement, I recommend the advisory members assist your cohort development efforts through our personal references and networking.

Thank you for allowing me as a Business Information Systems Advisory Board member to provide my input in support of this innovative Master of Science (MS) degree in Business with concentrations in Financial Planning and Supply Chain Analytics. Should you have any follow up questions, please feel free to contact me directly.

Respectfully,

Ben Berry
BIS Advisory Board Member
CEO and Chief Digital Officer AirShip Technologies Group
18522 Anduin Terrace
Lake Oswego, OR 97034
Executive Vice President and CIO for Bonneville Power Administration
Advisory Board Member, OSU Business Information Systems, College of Business
Board of Director, Central City Concern
Board of Director, Boy Scouts of America, Cascade Pacific Region
Board of Director, Evergreen Aviation and Space Museum
Board of Director, iUrban Teen Tech Summits
Previous Member of the CIO Alliance of Oregon